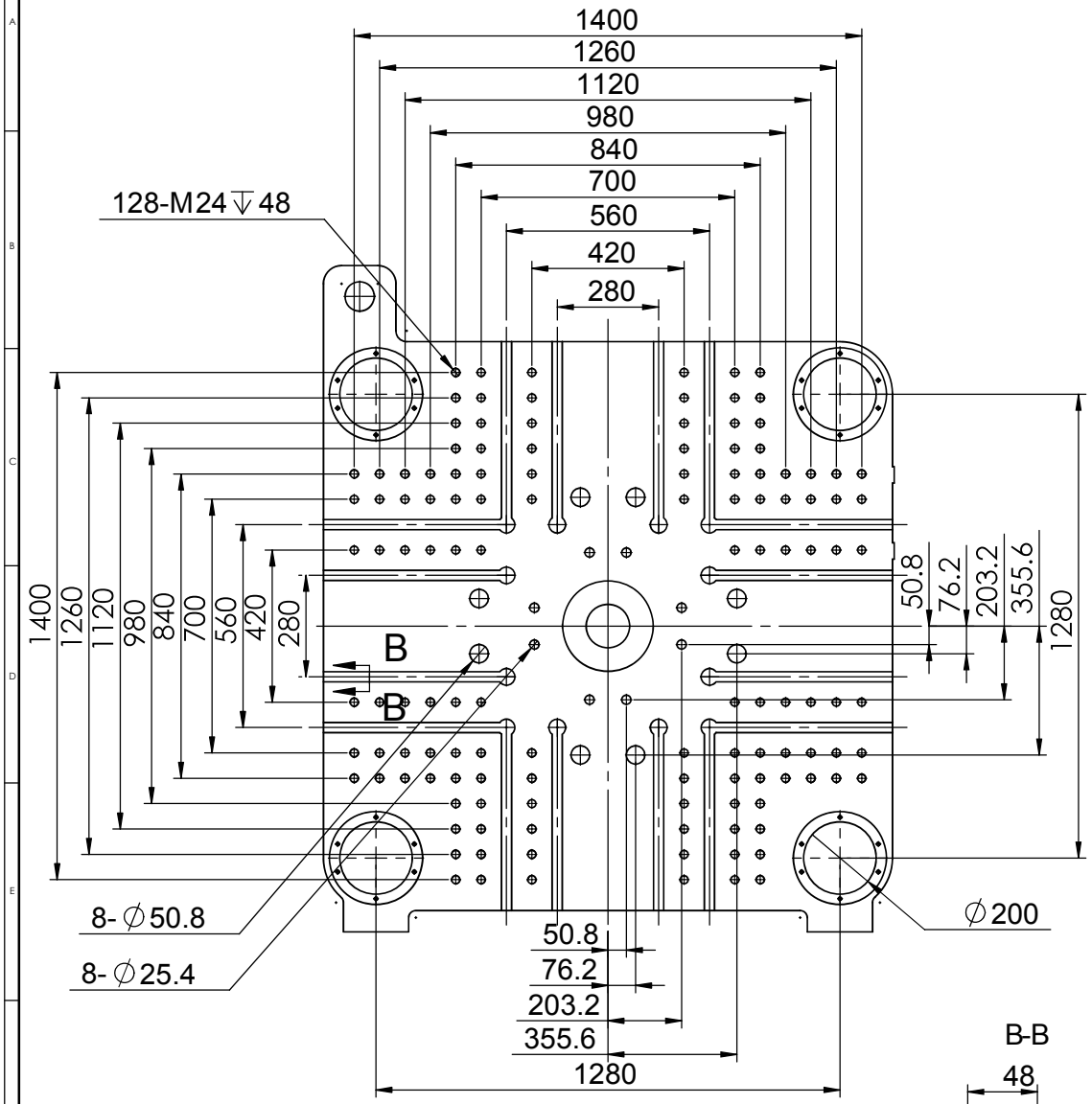
1400
1260
1120
980
840
700
560
420
280
128-M24 ↧ 48
B
B
50.8
76.2
203.2
355.6
1280
8- ∅50.8
8- ∅25.4
∅200

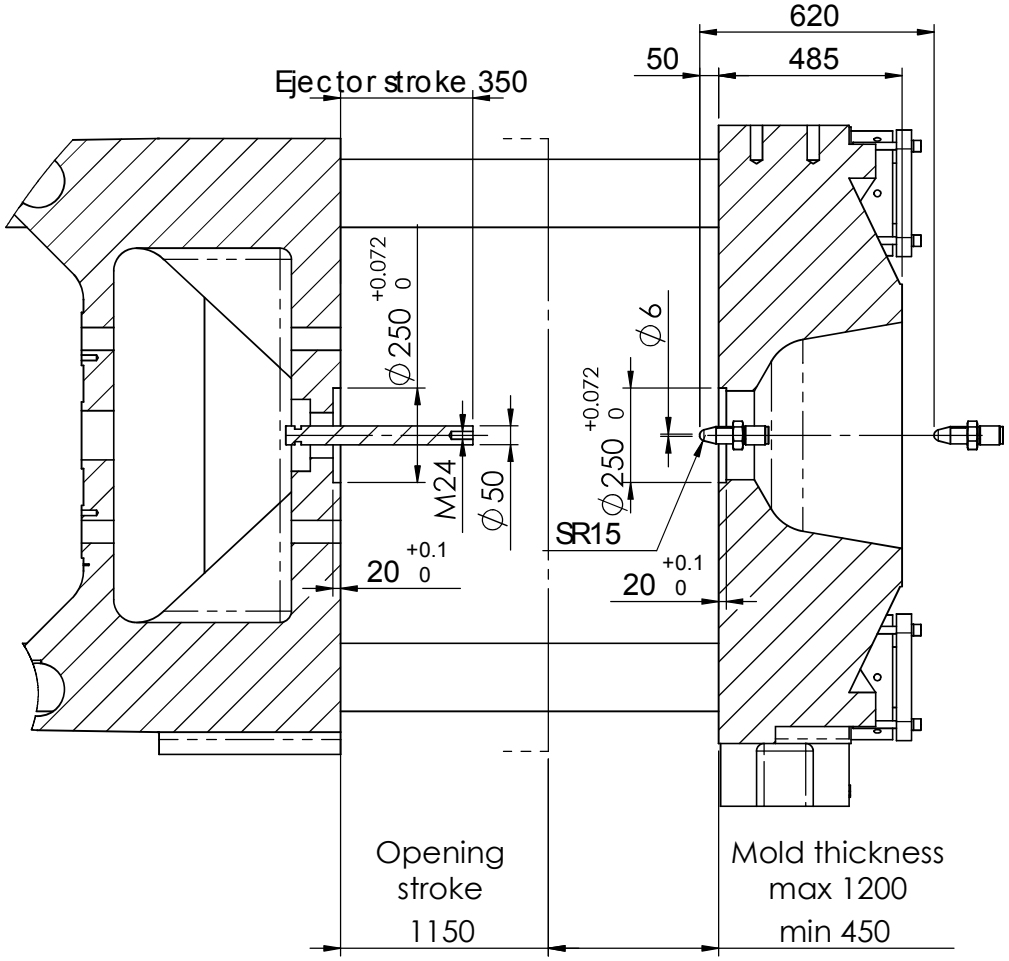
Ejector stroke 350
620
50
485
∅250 +0.072 0
∅6
M24
∅50
∅250 +0.072 0
SR15
20 +0.1 0
20 +0.1 0
Opening stroke 1150
Mold thickness max 1200 min 450

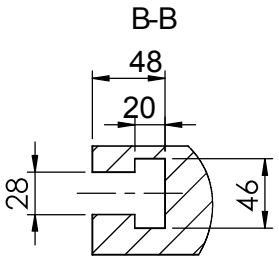
B-B
48
20
28
46

JM1000-SVP2